UNIVERSITY OF GLASGOW

Degrees of MEng, BEng, MSc and BSc in Engineering

ROBOTICS 4 (ENG4118)

28th April 2017
09:30 – 11:30 (alternative 2 hour format)

Attempt ANY TWO questions from SECTION A
and ANY TWO questions from SECTION B

The numbers in square brackets in the right-hand margin indicate the marks allotted to the part of the question against which the mark is shown. These marks are for guidance only.

An electronic calculator may be used provided that it does not have a facility for either textual storage or display, or for graphical display.

SECTION A: [40 Marks]
Attempt ANY TWO questions from this section

Q1 (a) Explain the difference between "*internal*" and "*external*" sensors in robotic applications and give some examples. [2]

(b) For the potentiometer circuit shown on Figure Q1b:

(i) prove that the ratio of the output voltage and input voltage is:

$$\frac{V_0}{V_{in}} = \frac{x}{1 + m \cdot x - m \cdot x^2}$$

where $m=R/R_L$ and $x=R_x/R$; [5]

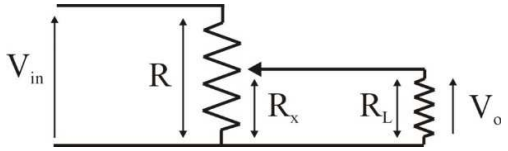

Figure Q1b. *Potentiometer circuit*

(ii) assuming a linear relationship between R_x and position, determine the percentage error in output voltage at $R_x=2k\Omega$, for $R=5k\Omega$ and $R_L=50k\Omega$. [2]

(c) Briefly describe absolute encoders commenting also on resolution and the advantages of using the Gray code. [4]

(d) Define the terms *Image Analysis* and *Image Processing.* [2]

Q2 (a) With reference to the typical diagram for *DC motors* in Figure Q2a:

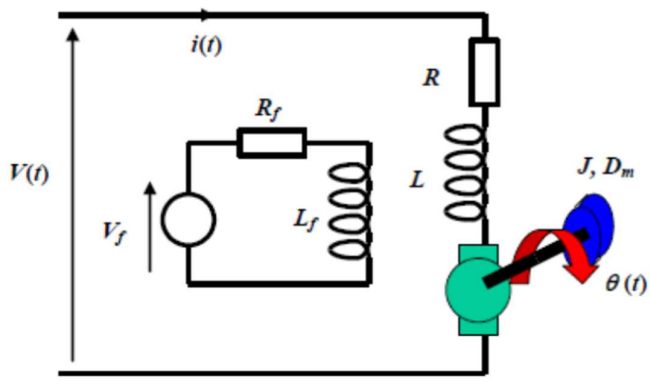

Figure Q2a. *DC motor diagram*

(i) derive the following *transfer function* between motor output angle θ and electric potential across the armature V; [5]

$$\frac{\Theta(s)}{V(s)} = \frac{\frac{K_t}{RJ}}{s\left(s + \frac{D_m}{J} + \frac{K_t K_V}{RJ}\right)}$$

(ii) define all the terms in the transfer function. [3]

(b) An actuator motor is required to perform a *trapezoidal move* with acceleration ramp of 0.5 s, 2 s at constant speed of 800 rpm and deceleration ramp of 0.1 s.

(i) Sketch (including calculated values) the resultant instantaneous *motor power* over the complete trapezoidal move, given the system parameters outlined on Table Q2b. [5]

Parameter	**Value**
Motor inertia (kg m^2)	0.005
Motor damping (Nm s/rad)	Negligible
Gear ratio	20
Load inertia (kg m^2)	0.5
Load damping (Nm s/rad)	Negligible
Fixed load torque (Nm)	5

Table Q2b

(ii) Assuming a motor efficiency of 80%, determine the maximum power consumed by the motor during this motion. [2]

Continued overleaf

Q3 (a) A joint of a six-axis robot is required to travel from an initial angle of 5º to a final angle of 60º in 6 seconds. Assuming zero initial and final velocities and adopting a polynomial position reference solution calculate the necessary polynomial coefficients. [7]

(b) It has subsequently been found that the actuator can only produce an initial acceleration of 4º/sec^2. Calculate the new polynomial position reference to satisfy this additional constraint. [8]

Continued overleaf

SECTION B: [40 Marks]
Attempt ANY TWO questions from this section

Q4. A manufacturing company uses a particular Cartesian Robot Manipulator fitted with an Euler configured end-effector at a key point in their manufacturing process. This manipulator type does not provide the flexibility they need in their manufacturing and they are considering replacing the Cartesian Manipulator with Cylindrical Manipulator. The replacement manipulator must be able to perform the same functions as the original Cartesian Manipulator. A key point in the manufacturing process requires the manipulator to be positioned and orientated in a particular manner. For the Cartesian Manipulator to achieve this position its actuators in the x, y and z axes are positioned at 1.995m, 0.140m and 7.1m respectively.

(a) Hence or otherwise, calculate the end-effector joint variables needed to produce the profile defined by the following *orientation matrix*:

$$orientation = \begin{bmatrix} -0.80 & -0.54 & 0.25 \\ 0.55 & -0.51 & 0.66 \\ -0.23 & 0.67 & 0.71 \end{bmatrix}$$

[6]

(b) By considering the position profile for the Cartesian Manipulator, calculate the joint variables required for the Cylindrical Manipulator to obtain the same position.

[5]

(c) Describe how the kinematics can be used to control position within a *Joint Space Control* scheme using *Independent Joint Control*. Illustrate your answer with an appropriate diagram.

[4]

Continued overleaf

Q5. Figure Q5 depicts an industrial robot manipulator. This manipulator consists of 4 revolute joints (joints 1, 2, 3 & 5) and 1 prismatic joint (joint 4).

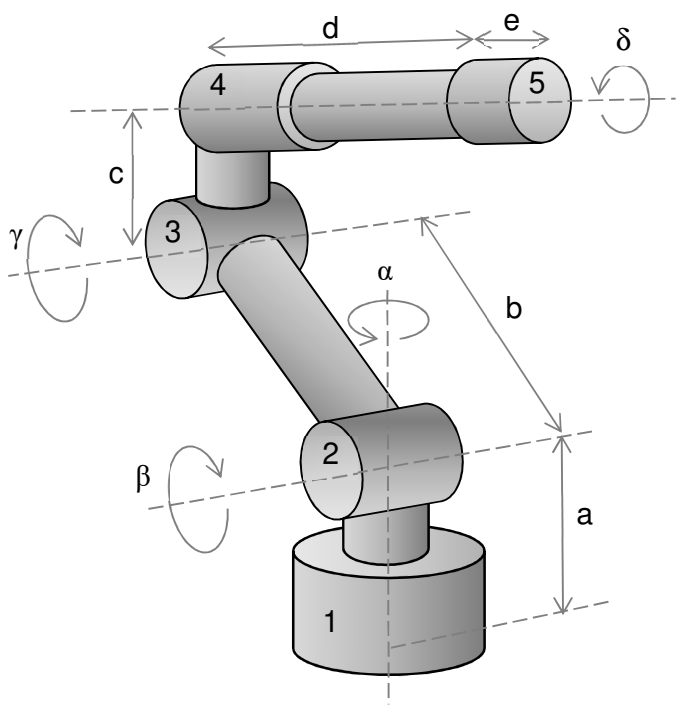

Figure Q5

Use the *Denavit-Hartenberg Representation* to derive the kinematic transformation matrix ${}^{U}T_{H}$ for the manipulator shown in Figure Q5. Specific dimensions of the robot are labeled $a - e$ and angles α - δ. Illustrate your answer with an appropriate diagram.

[15]

Continued overleaf

Q6. The transformation matrices below describe the successive joints from 1 to 6 for a particular robot manipulator with end-effector.

$$A_1 = \begin{bmatrix} 0.87 & -0.5 & 0 & 0 \\ 0.5 & 0.87 & 0 & 0 \\ 0 & 0 & 1 & 0 \\ 0 & 0 & 0 & 1 \end{bmatrix}, \qquad A_2 = \begin{bmatrix} 1 & 0 & 0 & 0 \\ 0 & 1 & 0 & 0 \\ 0 & 0 & 1 & 2.25 \\ 0 & 0 & 0 & 1 \end{bmatrix},$$

$$A_3 = \begin{bmatrix} 1 & 0 & 0 & 0.25 \\ 0 & 0 & -1 & 0 \\ 0 & 1 & 0 & 1.75 \\ 0 & 0 & 0 & 1 \end{bmatrix}, \qquad A_4 = \begin{bmatrix} 0.97 & 0 & -0.25 & 0 \\ 0.25 & 0 & 0.97 & 0 \\ 0 & -1 & 0 & 0 \\ 0 & 0 & 0 & 1 \end{bmatrix},$$

$$A_5 = \begin{bmatrix} 0.68 & 0 & 0.73 & 0 \\ 0.73 & 0 & -0.68 & 0 \\ 0 & 1 & 0 & 0 \\ 0 & 0 & 0 & 1 \end{bmatrix}, \qquad A_6 = \begin{bmatrix} 0.85 & 0 & 0.53 & 0 \\ 0.53 & 0 & -0.85 & 0 \\ 0 & 1 & 0 & 0 \\ 0 & 0 & 0 & 1 \end{bmatrix}$$

Here joints 1, 4, 5 and 6 are revolute, 2 and 3 are prismatic.

Using these transformation matrices, derive the Robot Jacobian for the manipulator's end effector defined above.

[15]

End of question paper